Accessory camera lens

VOS-LE-C-35MM-JC

- Exchangeable lens (C-Mount)
- Focal length 35 mm
- F 1.6-16
- Format 2/3"
- MOD 0.3 m
- C-mount

Fixed focal length lens, high-resolution, compact Megapixel lens, with locking screws for C-mount cameras

Dimensions

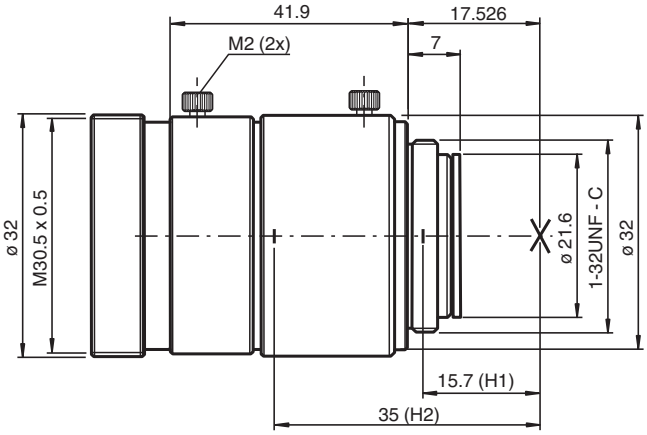

Technical Data

General specifications	
Focal length	35 mm
Format	2/3"
Aperture	F1,6-16
Aperture contro	manually
Horizontal angle of view	76 °
Vertical angle of view	56.9 °
Diagonal angle of view	95.3 °
At image format	6.6 x 8.8 mm
MOD (Minimum object distance)	300 mm
Ambient conditions	
Operating temperature	-10 ... 50 °C (14 ... 122 °F)
Storage temperature	-20 ... 60 °C (-4 ... 140 °F)
Mechanical specifications	
Housing length	36.5 mm
Housing diameter	Ø 32 mm

Release date: 2021-08-27 Date of issue: 2021-08-27 Filename: 70142266_eng.pdf

Technical Data

Mass	85 g
Objective connection	C-mount
Filter thread	M 30,5 × 0,5

Release date: 2021-08-27 Date of issue: 2021-08-27 Filename: 70142266_eng.pdf